BYT01

插装阀用导磁套

Magnetic guide tube for cartridge valve

- 拉式，三段氩弧焊接，外六角螺纹连接
- Pull type，Three stage welding，External hexagon thread connection

BYT01-16A-01

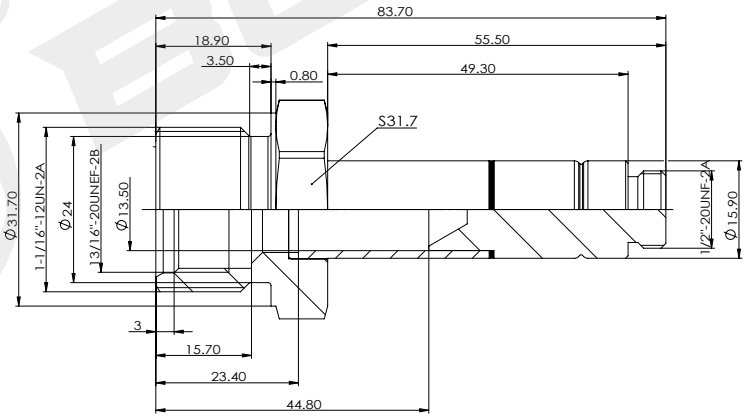

技术参数 /technical parameter					
工作油压 Working oil pressure	MPa	≤ 21	六角尺寸 Hexagon size	mm	31.75

BYT01-16B-01

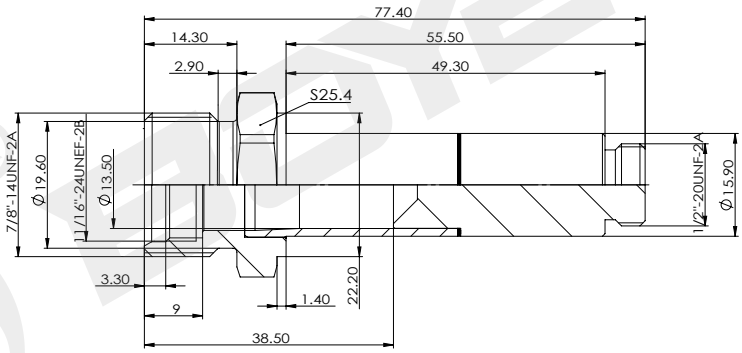

技术参数 /technical parameter					
工作油压 Working oil pressure	MPa	≤ 21	六角尺寸 Hexagon size	mm	22.2V

样本数据来源于试验室环境，仅供参考，贵公司如需最新数据或有特殊需求，欢迎联系搏业液压工程师。
The sample data comes from the laboratory environment and is only for reference. If your company needs the latest data or has special needs, please contact Boye hydraulic engineer.

TEL:0574-86587131
www.nbboye.net